Manufacturer:
US Conec

Product Name:
US Conec Ferrule Crimper Tool for MTP® Connector - Oval

Manufacturer Part Number:
12245

Learn More

Click here for more details on the US Conec Ferrule Crimper Tool for MTP® Connector - Oval

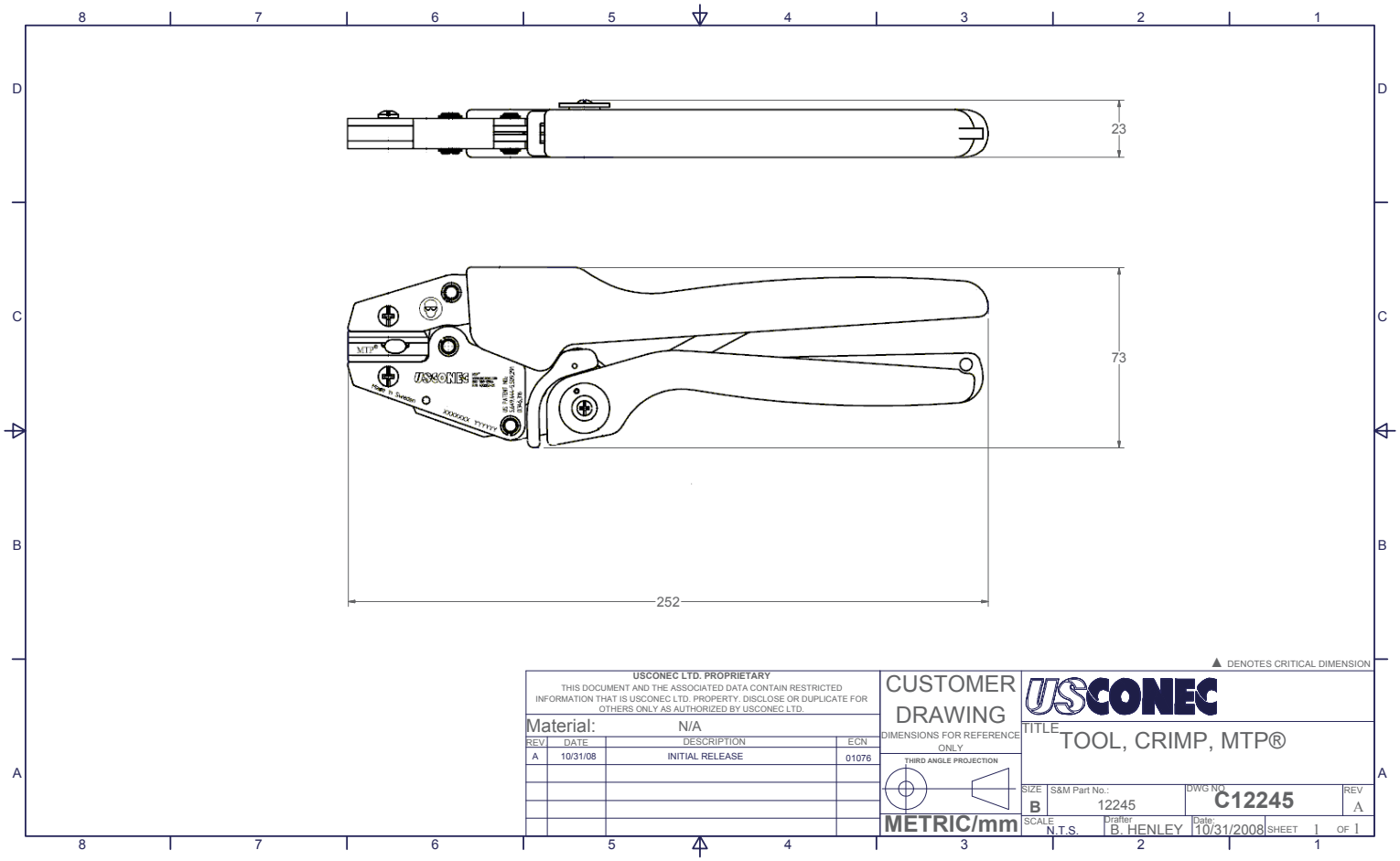

Contact the professionals at Fiber Optic Center for a quote or to get more details.

23 Centre Street • New Bedford, MA 02740 USA • focenter.com • 508-992-6464 • (800) 473-4237 • sales@focenter.com

Product specifications and data are subject to change without notice.